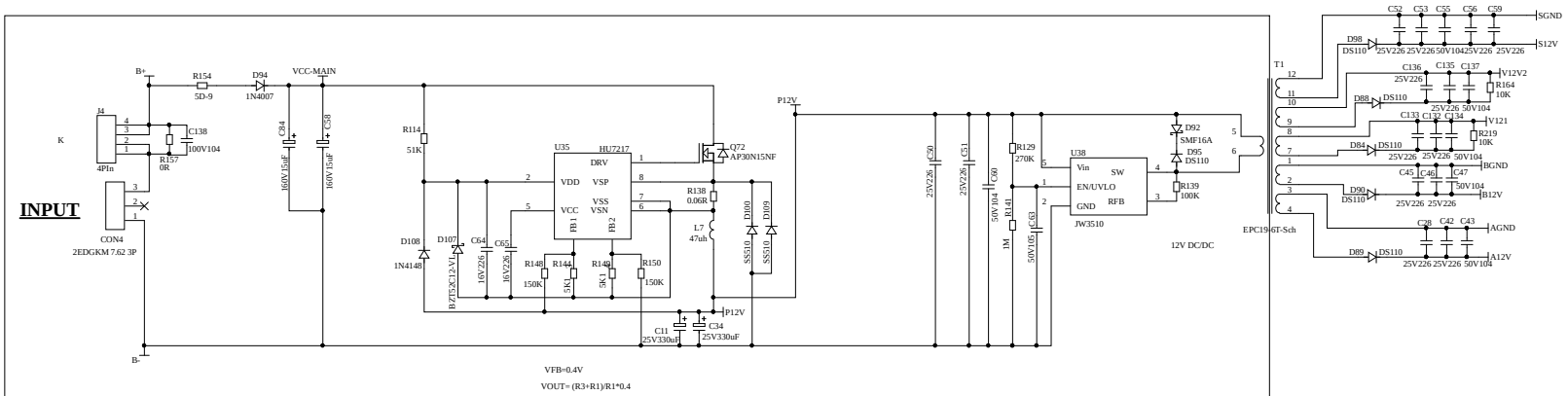

Title		
Size A2	Number	Revision
Date: 2023/10/11		Sheet of
File: \\..\GW-24S15EB-V1.5.SchDoc		Drawn By: